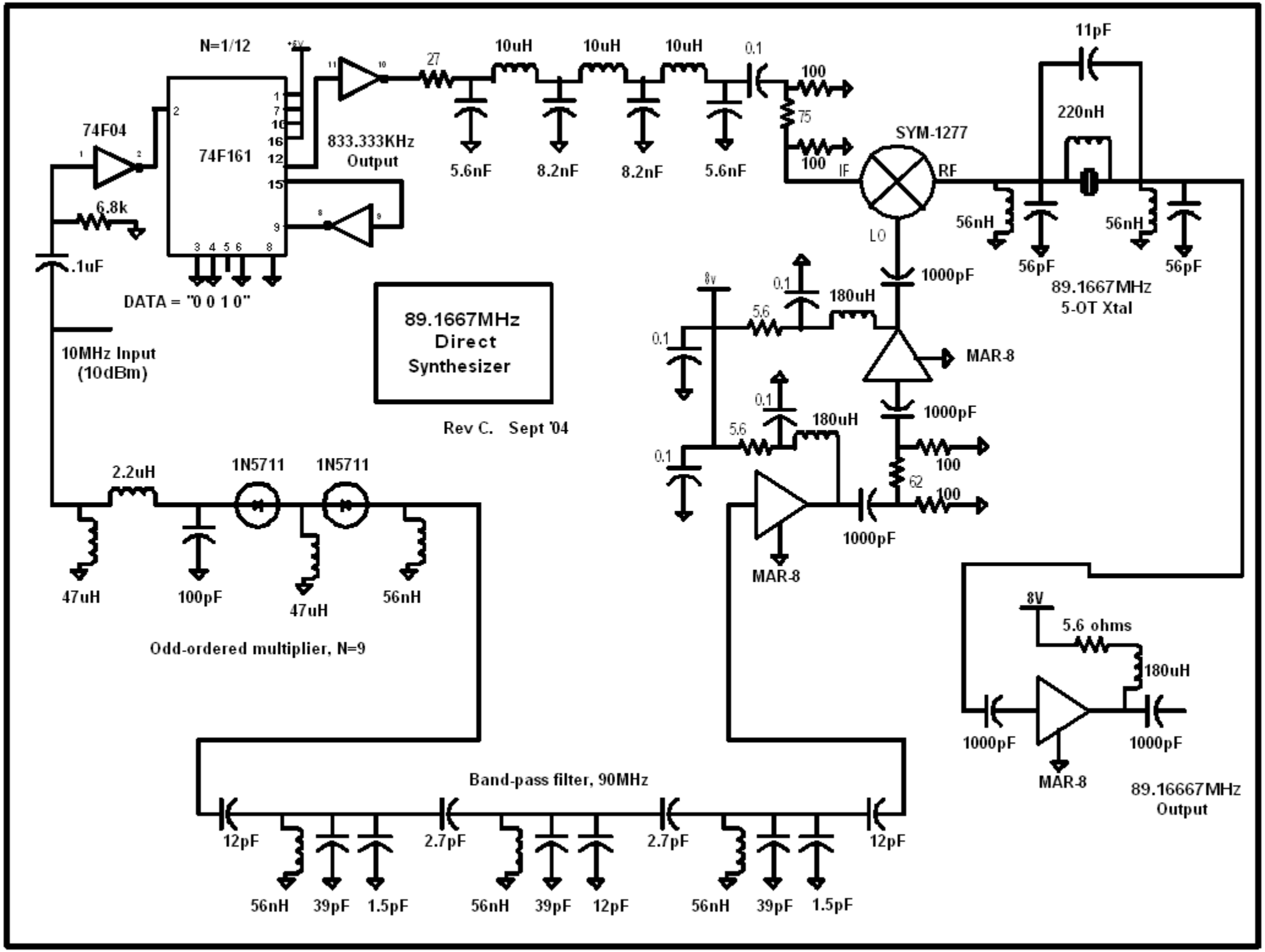
N=1/12
+5V
74F04
74F161
6.8k
.1uF
DATA = "0 0 1 0"
833.333KHz
Output
27
10uH
10uH
10uH
0.1
5.6nF
8.2nF
8.2nF
5.6nF
100
75
100
IF
SYM-1277
RF
LO
11pF
220nH
56nH
56pF
56nH
56pF
89.1667MHz
5-OT Xtal
1000pF
8V
0.1
180uH
5.6
MAR-8
0.1
0.1
180uH
5.6
1000pF
100
62
100
0.1
1000pF
MAR-8
89.1667MHz
Direct
Synthesizer
Rev C. Sept '04
10MHz Input
(10dBm)
2.2uH
1N5711
1N5711
47uH
100pF
47uH
56nH
Odd-ordered multiplier, N=9
8V
5.6 ohms
180uH
1000pF
1000pF
MAR-8
89.16667MHz
Output
Band-pass filter, 90MHz
12pF
2.7pF
2.7pF
12pF
56nH
39pF
1.5pF
56nH
39pF
12pF
56nH
39pF
1.5pF