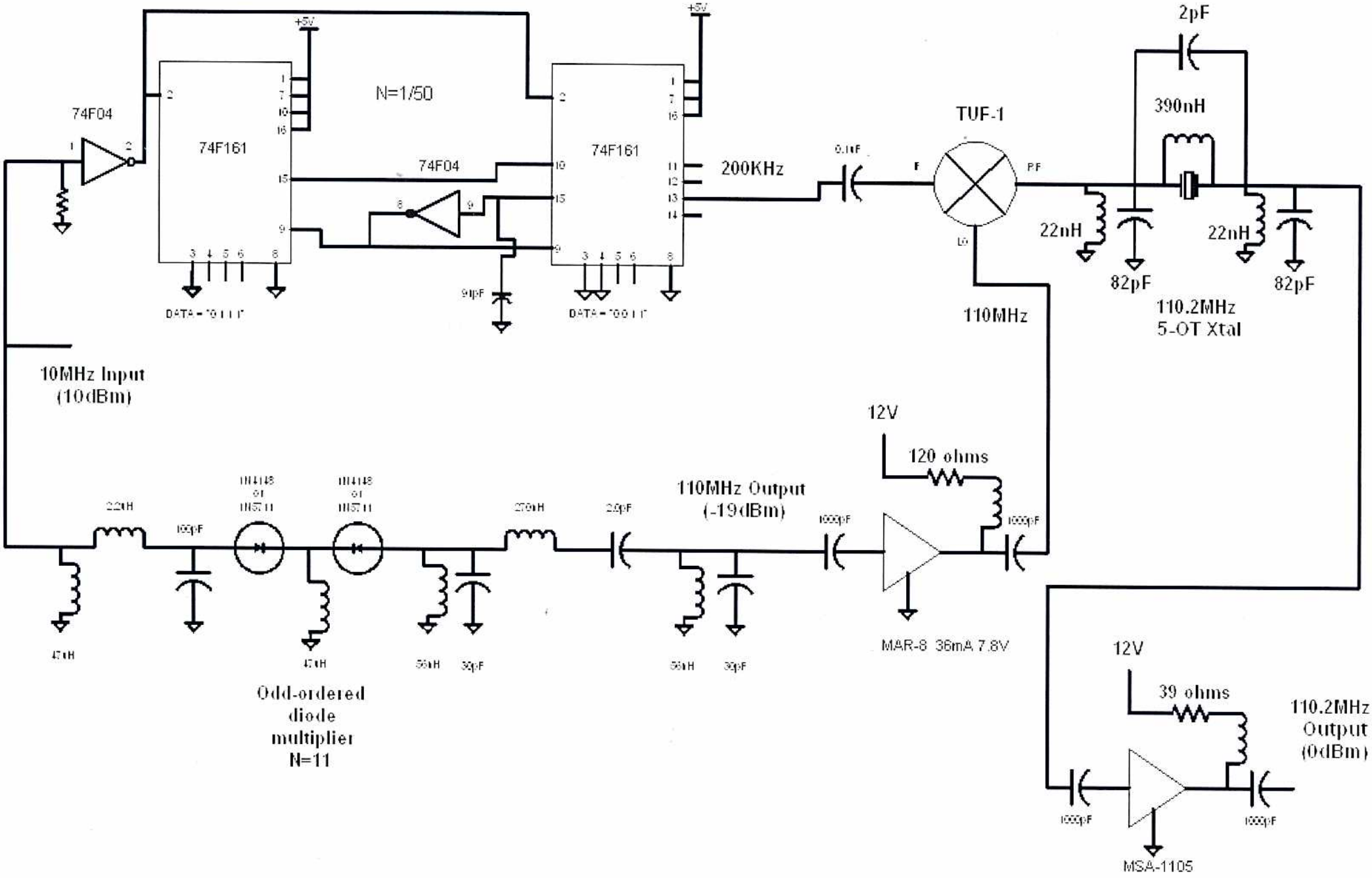

110.2MHz Direct Synthesizer

Rev. C WA1ZMS, Oct '03